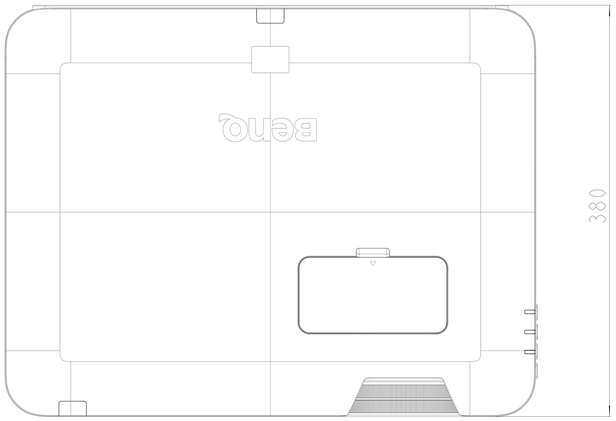
380

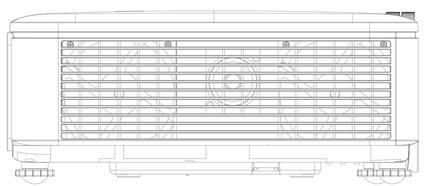

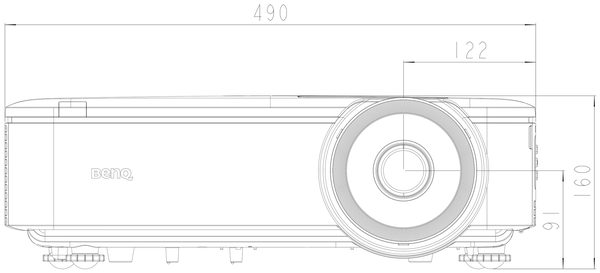
490
122
160
16

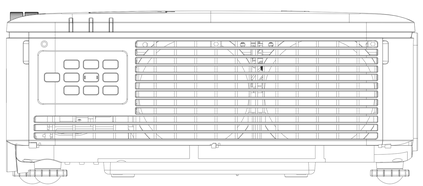

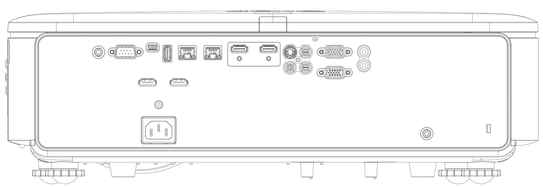

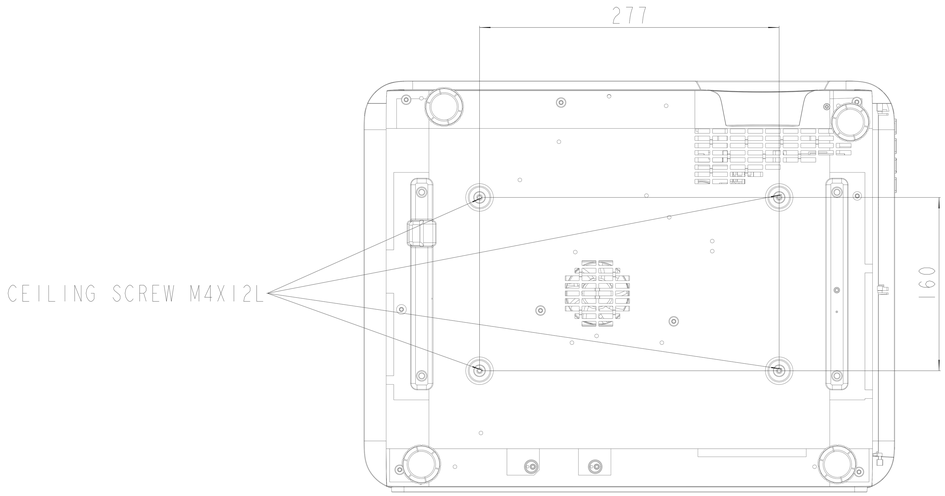
277
160
CEILING SCREW M4X12L