CoolMasterHM

Capabilities	
• Seamless integration of VRF with Home Automation & Control app • Maximum number of VRF indoor units: 6 • Interfaces: Ethernet (ASCII) • Control and monitor indoor units from the touch screen • Full control of HVAC indoor unit – On/Off, Setpoint, Operation Mode, Fan speed, Louver • Bi-directional communication with all indoor units on the VRF system: Room Temp, unit real time status (on/off, setpoint, fan, louver), error codes	

Power	
Power Supply:	120VAC 60 Hz /220VAC 50 Hz
Power Consumption:	1.5 Watt

Operating Conditions	
Surrounding Temperature Limits (C/F)	-10° C to +60° C / +14 F to +140 F
Humidity (%)	0% to 96%
Dimensions (H x W x D) (inches/mm)	3.54 x 6.14 x 1.37 / 90 x 156 x 35
Weight (lbs/kg)	0.58 / 265
Maximum RS232 wiring length (ft/m)	82/25
Maximum Ethernet cable length (ft/m)	450/137
Air-conditioning communication (Brand dependent)	2-3 wired shielded cable

CoolAutomation products are subject to continuous improvements. CoolAutomation reserves the right to modify product design, specifications and information in this datasheet without notice and without incurring any obligations.

Dimensional drawings

Front View

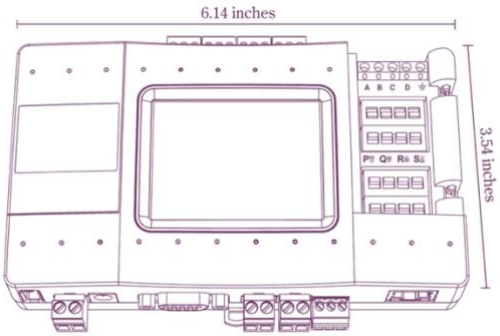

Top View

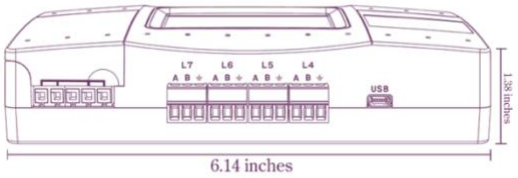

Bottom View

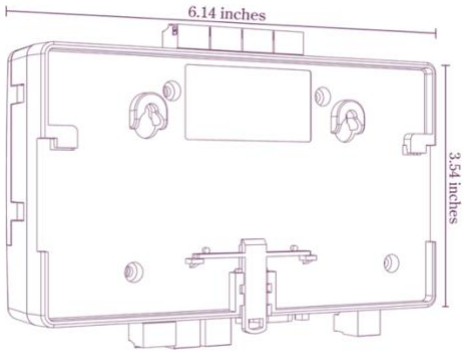

Back View

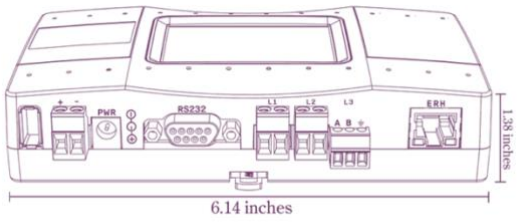

CoolAutomation products are subject to continuous improvements. CoolAutomation reserves the right to modify product design, specifications and information in this datasheet without notice and without incurring any obligations.