| REV | DESCRIPTION | DRW | DATE |
|---|---|---|---|

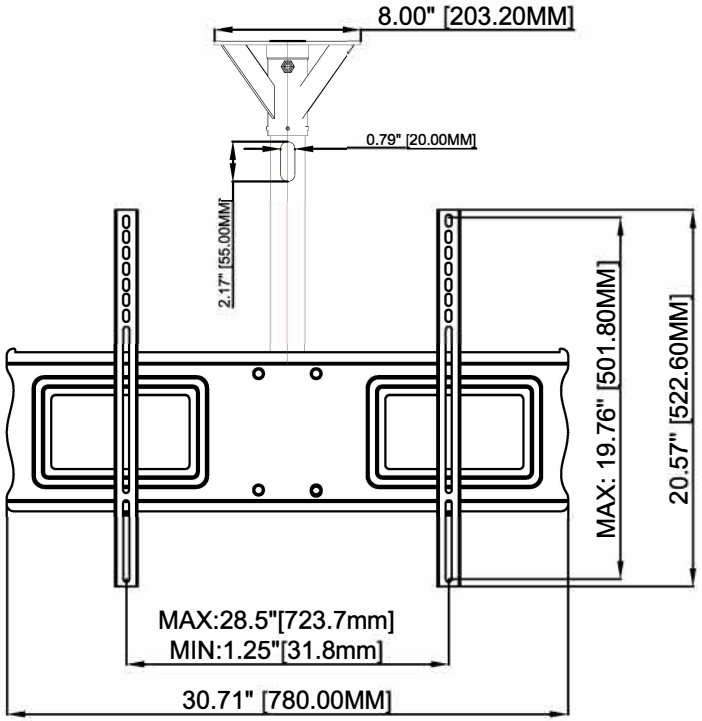


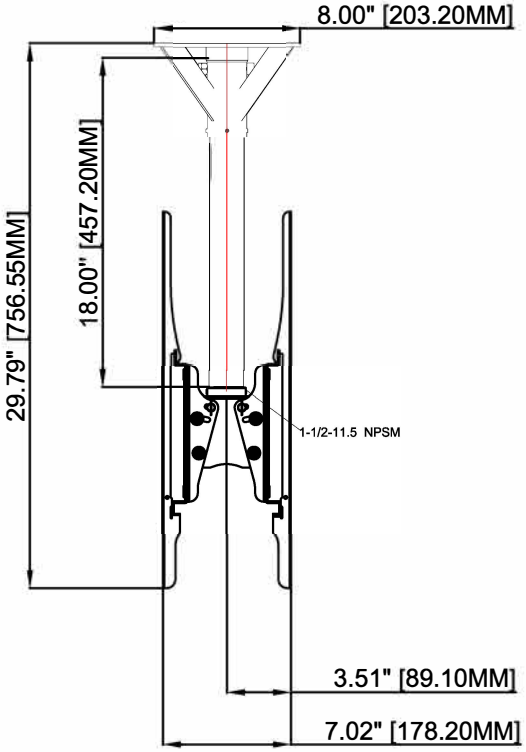


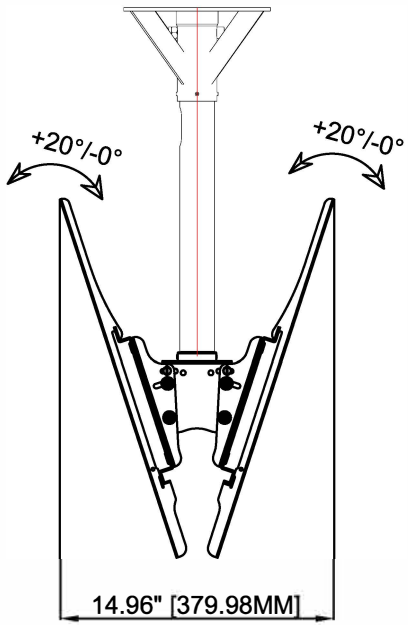


The information herein is the property of SunBriteTV. No portion of this data shall be released, disclosed, used, or duplicated for any purposes without the written consent of SunBriteTV.

SunBriteTV®

| SB-CM-DT-L-BL | UNIT: INCH[MM] |
|---|---|
| PROJECTION | SCALE: 1:1 |