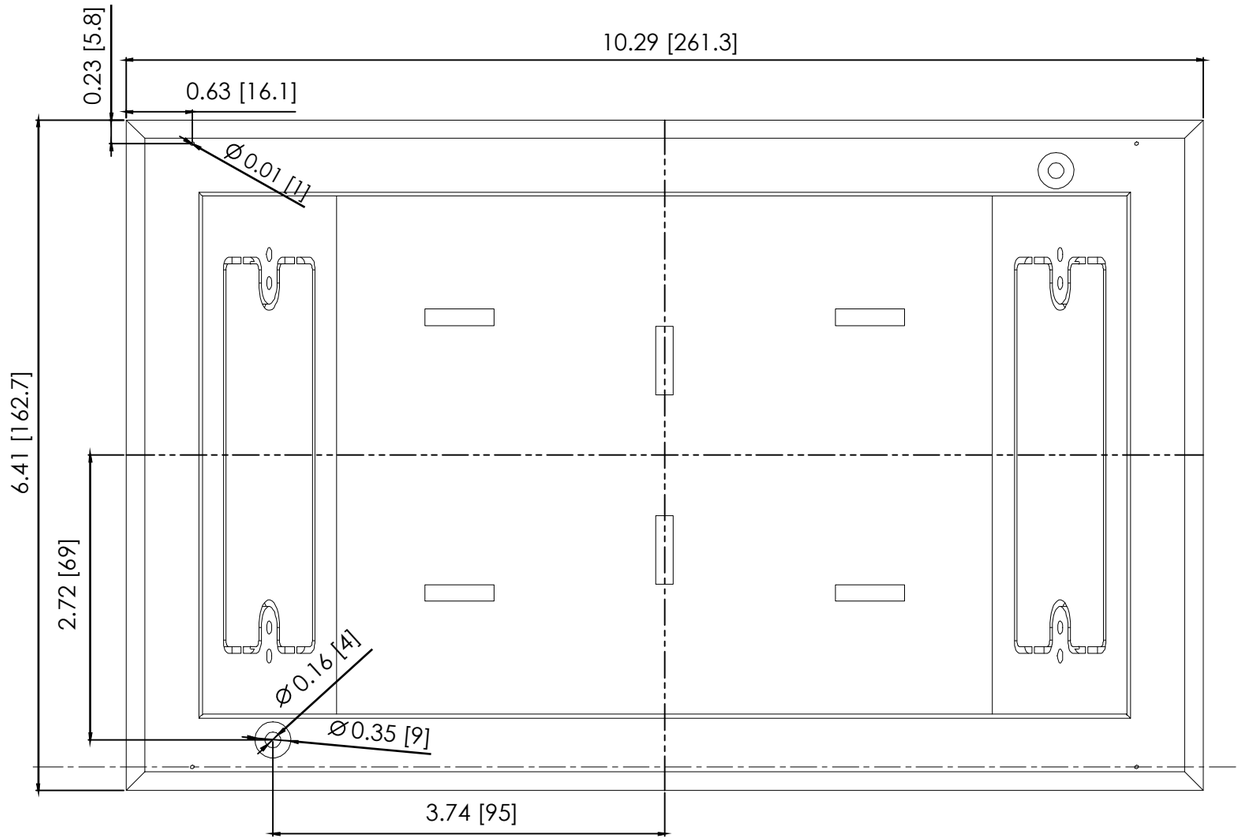

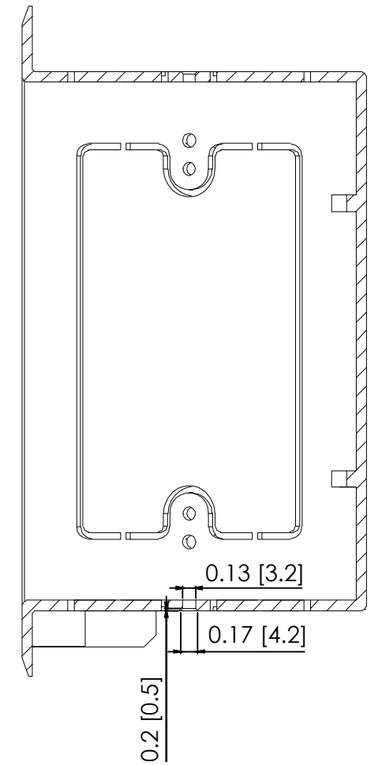

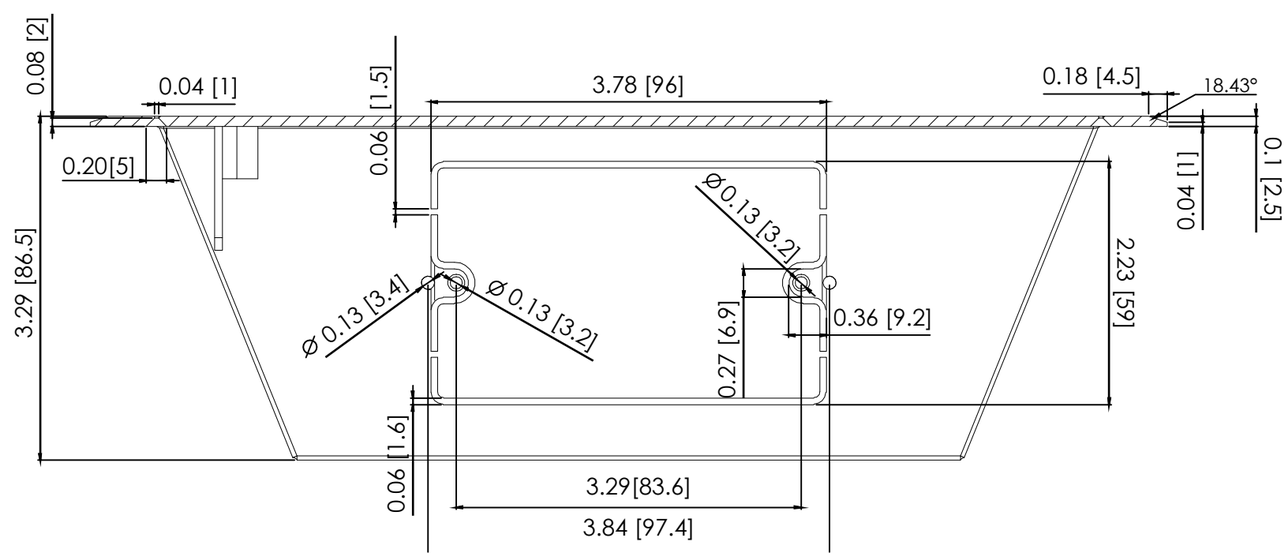

ALL DIMENSIONS IN INCHES [mm]

CUSTOMER PRINT

STRONG

PROPRIETARY AND CONFIDENTIAL

THE INFORMATION CONTAINED IN THIS DRAWING IS THE SOLE PROPERTY OF STRONG MOUNTS AND LIFTS. ANY REPRODUCTION IN PART OR AS A WHOLE WITHOUT THE WRITTEN PERMISSION OF SNAP AV IS PROHIBITED.

SIZE	DRAWING NUMBER	DWG REV
B	SM-RBX-WH1	C
	DO NOT SCALE DRAWING	SHEET 1 OF 1